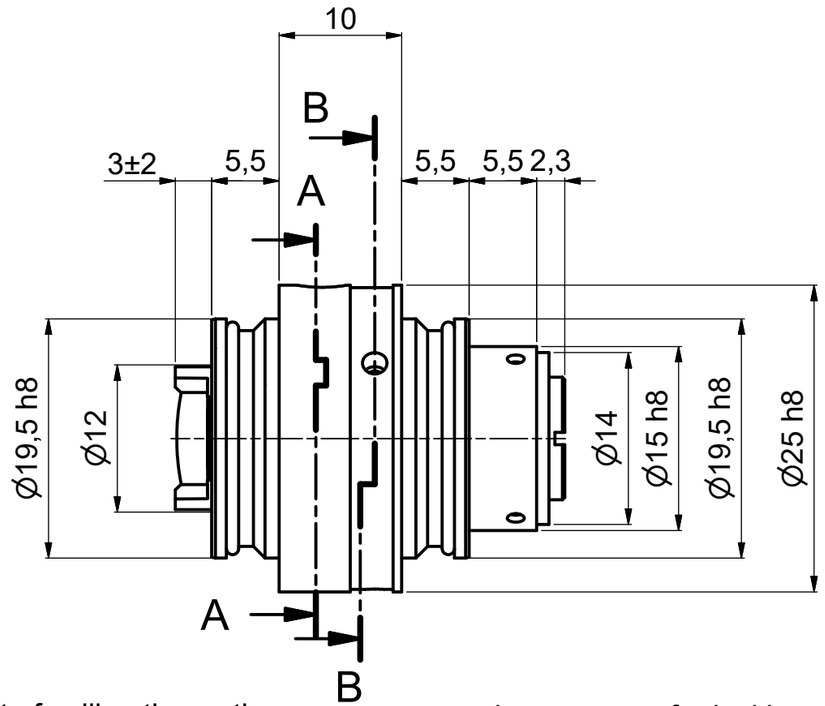

A-A

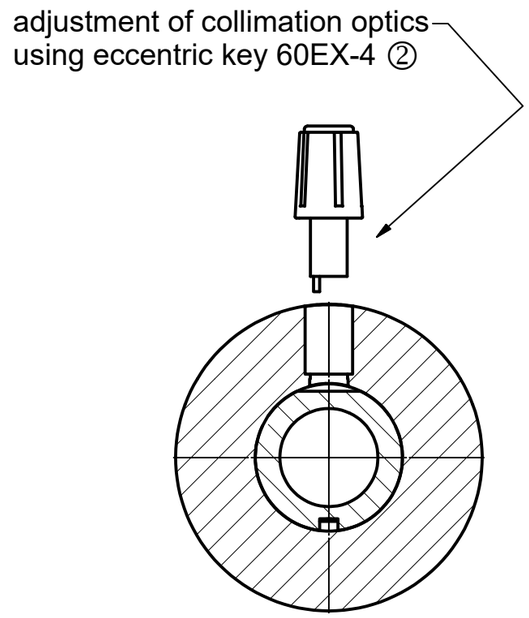

B-B

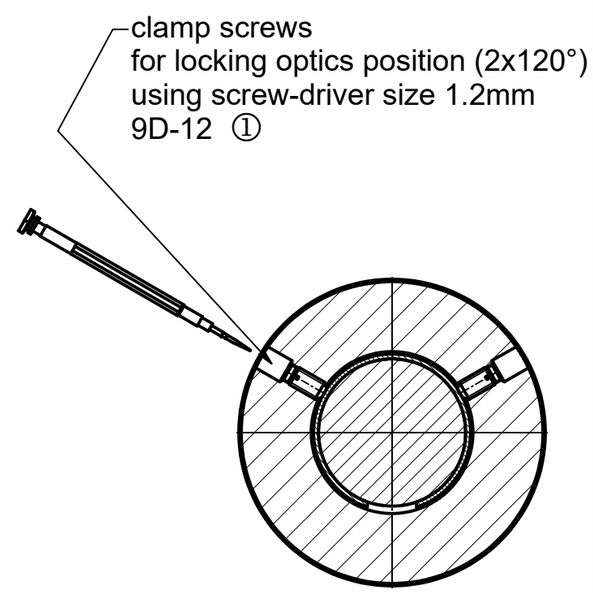

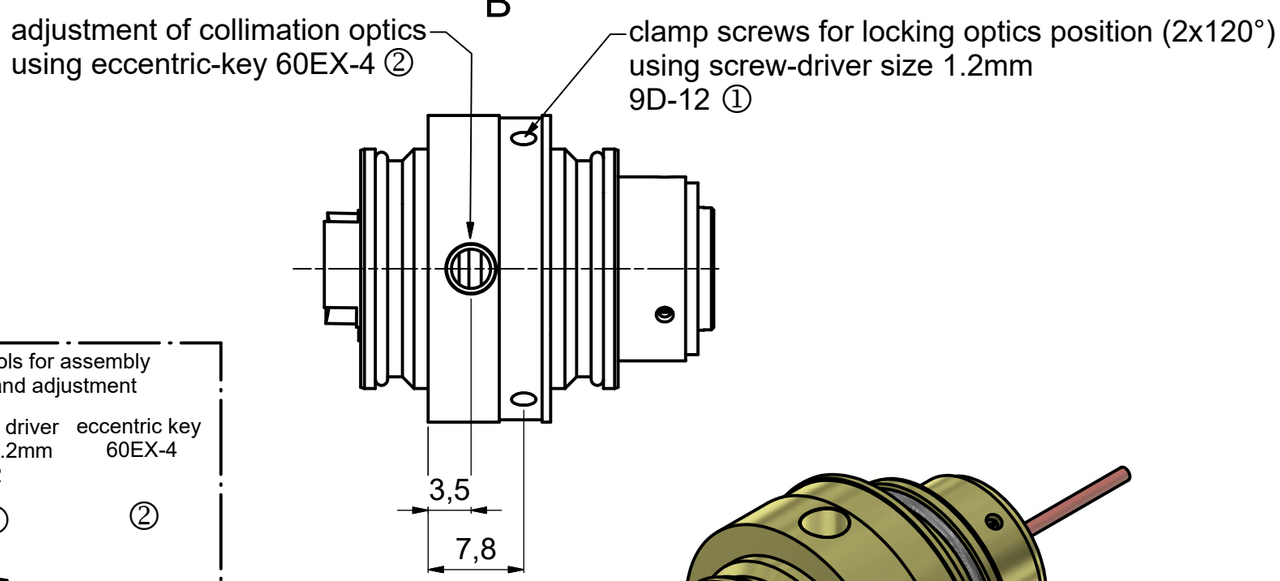

Tools for assembly
and adjustment

screw driver size 1.2mm 9D-12	eccentric key 60EX-4
①	②

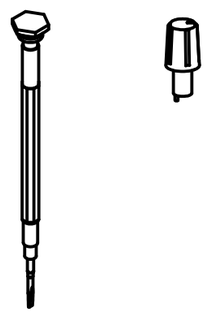

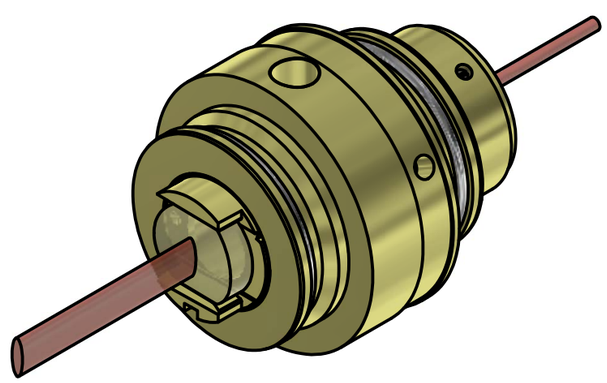

! Don´t touch any other screws !

Dimensions DIN EN ISO 14405					Scale: 2:1
					5AN-2-xx
				Date	Name
			editor	22.11.2019	A.Trapp
			exam.		
			free		
			Schäfter+Kirchhoff GmbH OPTICS, METROLOGY, AND PHOTONICS		9302-1039-0201
			File: 930210390201.idw		Model: 930210390201.iam

Anamorphot 5AN-2-xx

5AN-2-xx

Customer Drawing

Sice: A3

Page: 1